Recommended Land Pattern PowerPAK® MLP4535-22L

Package outline top view, transparent
(not bottom view)

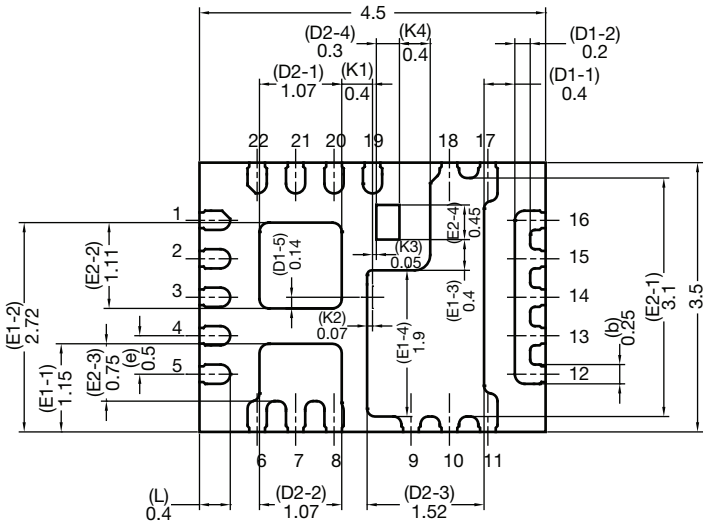

Land pattern

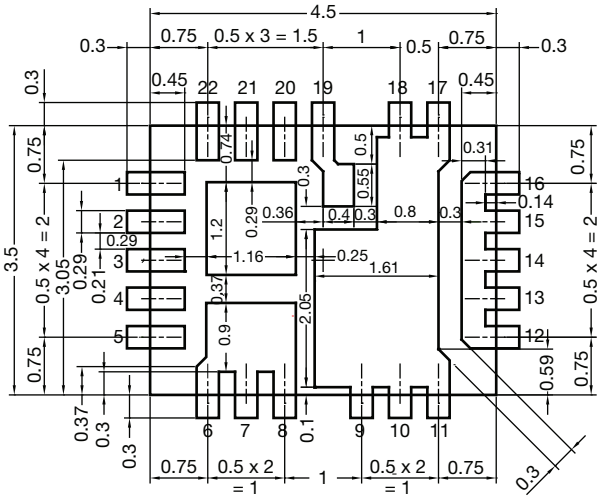

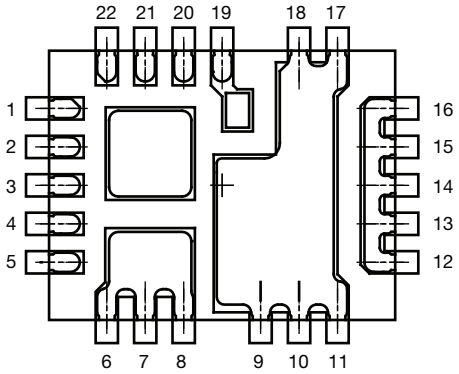

All dimensions in millimeters

For technical questions, contact: powerictechsupport@vishay.com

THIS DOCUMENT IS SUBJECT TO CHANGE WITHOUT NOTICE. THE PRODUCTS DESCRIBED HEREIN AND THIS DOCUMENT ARE SUBJECT TO SPECIFIC DISCLAIMERS, SET FORTH AT www.vishay.com/doc?91000